ATyS S - ATyS Sd

Motorised changeover switches

from 40 to 125 A

new

Function

ATyS S is a range of 4 pole motorised changeover switches with positive break indication.
They enable the on load transfer of two three-phase supplies via remote volt-free contacts, from either an external automatic controller, using pulse logic, or a switch.
They are intended for use in low voltage power systems where interruption of the load supply is acceptable during transfer.

Advantages

Extensive power supply range

The ATyS S is available in four supply versions, each with a broad range (+/-30%).
The four versions are:

- 230 VAC single power supply,
- 2 x 230VAC dual power supply,
- 12 VDC power supply and
- 24/48 VDC power supply.

Safety and reliability

ATyS S products use stable position technology, ensuring constant pressure on the contacts and preventing premature faults. In addition, they do not require a power supply to maintain position, thus protecting their loads from voltage fluctuations.

Easy integration

ATyS S products can be easily installed inside enclosures.
Their design, and in particular their compact size, enables integration within most 200 mm deep enclosures.

Simplified maintenance

Maintenance can be carried out easily under load, with manual operation still available.
The control and motorisation section can be replaced simply by removing 4 screws, with no work required on the installation cabling.

ATyS Sd: Dual power supply

In addition to the functions offered by the ATyS S, the ATyS Sd incorporates supply redundancy without the need for additional wiring. This is obtained by integrating a double supply (2 independent supplies) directly within the product.

The solution for

- Generator manufacturers.
- Heating.
- Air conditioning.
- Ventilation.
- Telecommunications.

Strong points

- Extensive power supply range.
- Safety and reliability.
- Easy integration.
- Simplified maintenance.
- ATyS Sd Dual power supply.

Conformity to standards

- IEC 60947-6-1
- IEC 60947-3
- GB 14048-11

Approvals and certifications[1]

(1) Product reference on request.

References

Rating (A)	No. of poles	Power supply	ATyS S	Bridging bars	Terminal shrouds	Voltage tap	Terminal retainer	DIN rail
40 A	4 P	24/48 VDC	9506 **4004**	4 P 9509 **4012**	Source side 2 pieces 9594 **4012** Load side 2 pieces 9594 **9012**	9599 **4001**	2 pieces 9599 **4003**	4 modules 9599 **4002**
	4 P	12 VDC	9505 **4004**					
	4 P	2 x 230 VAC	9513 **4004**					
	4 P	230 VAC	9503 **4004**					
63 A	4 P	24/48 VDC	9506 **4006**			9599 **4001**		
	4 P	12 VDC	9505 **4006**					
	4 P	2 x 230 VAC	9513 **4006**					
	4 P	230 VAC	9503 **4006**					
80 A	4 P	24/48 VDC	9506 **4008**			9599 **4001**		
	4 P	12 VDC	9505 **4008**					
	4 P	2 x 230 VAC	9513 **4008**					
	4 P	230 VAC	9503 **4008**					
100 A	4 P	24/48 VDC	9506 **4010**			9599 **4001**		
	4 P	12 VDC	9505 **4010**					
	4 P	2 x 230 VAC	9513 **4010**					
	4 P	230 VAC	9503 **4010**					
125 A	4 P	24/48 VDC	9506 **4012**			9599 **4001**		
	4 P	12 VDC	9505 **4012**					
	4 P	2 x 230 VAC	9513 **4012**					
	4 P	230 VAC	9503 **4012**					

Accessories

Bridging bars

Use

For bridging power terminals on the top or bottom side of the switch

Rating (A)	No. of poles	Reference
40 … 125	4 P	9509 **4012**

atys-s_019_a

Voltage tap

Use

Enables the required power supply for ATyS S 230 VAC and ATyS Sd products to be tapped directly from the product's incoming power terminals. Can also be utilised in applications without neutral, to provide 400 VAC to the autotransformer.

Rating (A)	Reference
40 … 125	9509 **4001**

atys-s_022_a

Terminal retainer

Use

These clips have a dual function:
- To prevent direct access to the power supply and control terminals and
- To secure these connector terminals.

Rating (A)	Pack	Reference
40 … 125	2 pieces	9599 **4003**

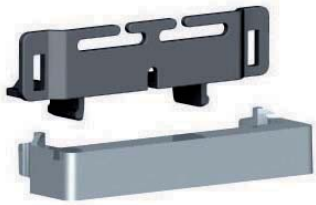

atys-s_021_a

Terminal shrouds

Use

IP2X protection against direct contact with terminals or connecting parts.

Terminal shrouds for the source side		
Rating (A)	**Pack**	**Reference**
40 … 125	2 pieces	9594 **4012**

Terminal shrouds for the load side		
Rating (A)	**Pack**	**Reference**
40 … 125	2 pieces	9594 **9012**

atys-s_020_a

atys-s_020_a

Autotransformer 400/230 VAC

Use

For applications without neutral, this autotransformer provides the 230 VAC required to power ATyS S 230 VAC and ATyS Sd products.

Rating (A)	Reference
40 … 125	9599 **4004**

DIN rail

Use

This 4-module DIN rail can be installed directly on the front of the ATyS S and can be utilised, for example, for the installation of a surge protection device.

Rating (A)	Reference
40 … 125	9599 **4002**

Surge protection device

Use

Provides transient overvoltage protection for one of the incoming supply sources. This device can be installed to the front of the ATyS S, by way of its DIN rail accessory.

Rating (A)	Reference
40 … 125	9599 **4005**

Characteristics according to IEC 60947-3 and IEC 60947-6-1

40 to 125 A

Thermal current I_{th} at 40°C		40 A	63 A	80 A	100 A	125 A
Rated insulation voltage U_i (V) (power circuit)		800	800	800	800	800
Rated impulse withstand voltage U_{imp} (kV) (power circuit)		6	6	6	6	6
Rated insulation voltage U_i (V) (operation circuit)		300	300	300	300	300
Rated impulse withstand voltage U_{imp} (kV) (operation circuit)		4	4	4	4	4
Rated operational currents I_e (A) according to IEC 60947-3						
Rated voltage	**Utilisation category**	**A/B**	**A/B**	**A/B**	**A/B**	**A/B**
415 VAC	AC-20 A / AC-20 B	40/40	63/63	80/80	100/100	125/125
415 VAC	AC-21 A / AC-21 B	40/40	63/63	80/80	100/100	100/125
415 VAC	AC-22 A / AC-22 B	40/40	63/63	80/80	100/100	100/100
415 VAC	AC-23 A / AC-23 B	-/40	-/63	-/63	-/63	-/63
Rated operational currents I_e (A) according to IEC 60947-6-1						
Rated voltage	**Utilisation category**	**A/B**	**A/B**	**A/B**	**A/B**	**A/B**
415 VAC	AC-31 B	40	63	80	100	125
415 VAC	AC-32 B	40	63	80	80	80
Fuse protected short-circuit withstand (kA rms prospective)						
Prospective short-circuit current (kA rms)		50	50	50	25	15
Associated fuse rating (A)		40	63	80	100	125
Circuit breaker protected short-circuit withstand with any circuit breaker that ensures tripping in less than 0.3s(1)						
Rated short-time withstand current 0.3s. I_{cw} (kA rms)		3.5	3.5	3.5	3.5	3.5
Short-circuit capacity (without protection)						
Rated short-time withstand current 1 s. I_{CW} (kA rms)		2.5	2.5	2.5	2.5	2.5
Rated short-circuit making capacity		4.5	4.5	4.5	4.5	4.5
Connection						
Maximum Cu cable cross-section (mm^2)		50	50	50	50	50
Tightening torque mini / maxi (Nm)		1.2/3	1.2/3	1.2/3	1.2/3	1.2/3
Switching time (Standard setting)						
I - 0 or II - 0 (ms)		500	500	500	500	500
I - II or II - I (ms)		1000	1000	1000	1000	1000
Duration of "electrical blackout" I - II (ms) minimum		500	500	500	500	500
Power supply						
Power supply 12 VDC min / max (VDC)		9/15	9/15	9/15	9/15	9/15
Power supply 24/48 VDC min / max (VDC)		17/62	17/62	17/62	17/62	17/62
Power supply 230 VAC min / max (VAC)		160/310	160/310	160/310	160/310	160/310
Control supply power demand						
Power supply 12 VDC inrush / nominal (VA)		200/40	200/40	200/40	200/40	200/40
Power supply 24/48 VDC inrush / nominal (VA)		200/40	200/40	200/40	200/40	200/40
Power supply 230 VAC inrush / nominal (VA)		200/40	200/40	200/40	200/40	200/40
Mechanical characteristics						
Durability (number of operating cycles)		10 000	10 000	10 000	10 000	10000
Weight ATyS S and ATyS Sd 4 P (kg)		3	3	3	3	3

(1) Value for coordination with any circuit breaker that ensures tripping in less than 0.3s. For coordination with specific circuit-breaker references, higher short-circuit current values are available. Please consult us.

Terminals and connections

ATyS Sd: 2 x 230 VAC

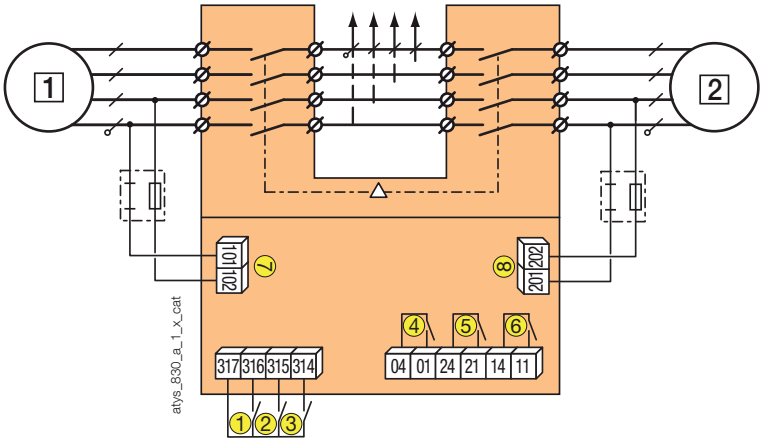

1 preferred source
2 alternate source
1 : position 0 control
2 : position I control
3 : position II control
4 : auxiliary contact, closed when the switch is in position 0
5 : auxiliary contact, closed when the switch is in position II
6 : auxiliary contact, closed when the switch is in position I
7 : power supply kit I: 230 VAC (160-310 VAC)
8 : power supply kit II: 230 VAC (160-310 VAC)

ATyS S:230 VAC

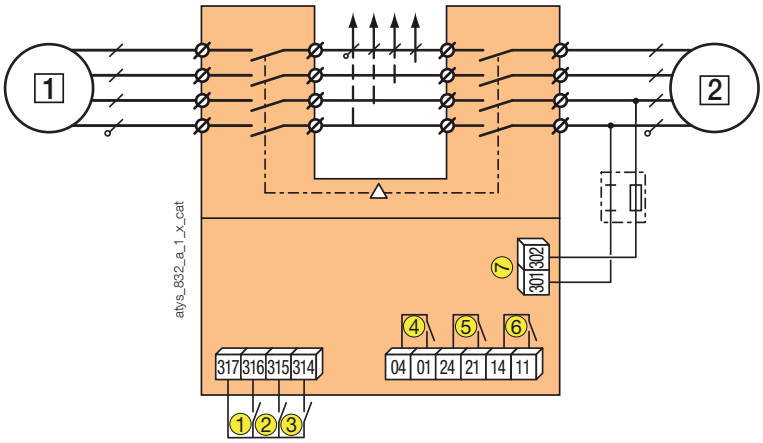

1 preferred source
2 alternate source
1 : position 0 control
2 : position I control
3 : position II control
4 : auxiliary contact, closed when the switch is in position 0
5 : auxiliary contact, closed when the switch is in position II
6 : auxiliary contact, closed when the switch is in position I
7 : power supply kit: 230 VAC (160-310 VAC)

ATyS S DC version

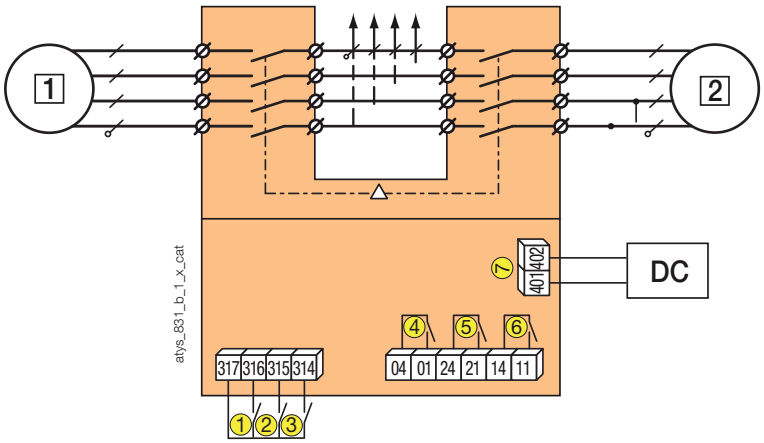

1 preferred source
2 alternate source
1 : position 0 control
2 : position I control
3 : position II control
4 : auxiliary contact, closed when the switch is in position 0
5 : auxiliary contact, closed when the switch is in position II
6 : auxiliary contact, closed when the switch is in position I
7 : power supply 12 VDC (9-15 VDC) or 24 VDC / 48 VDC (17-62 VDC) depending on the version.

Dimensions

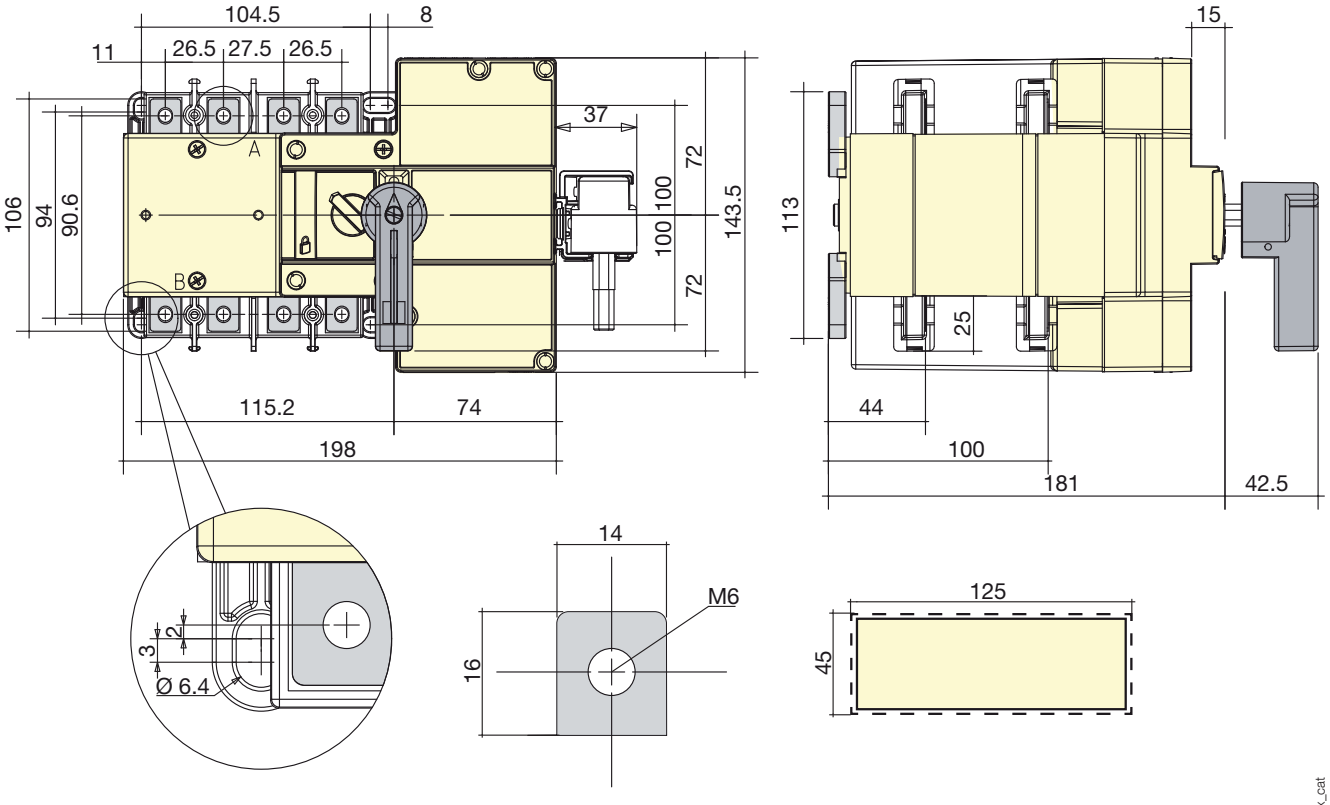
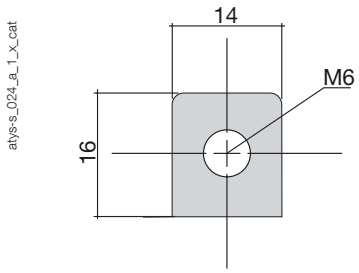
Connection terminal